Ball Bearing

207KRR

Ball Bearing

Harvester



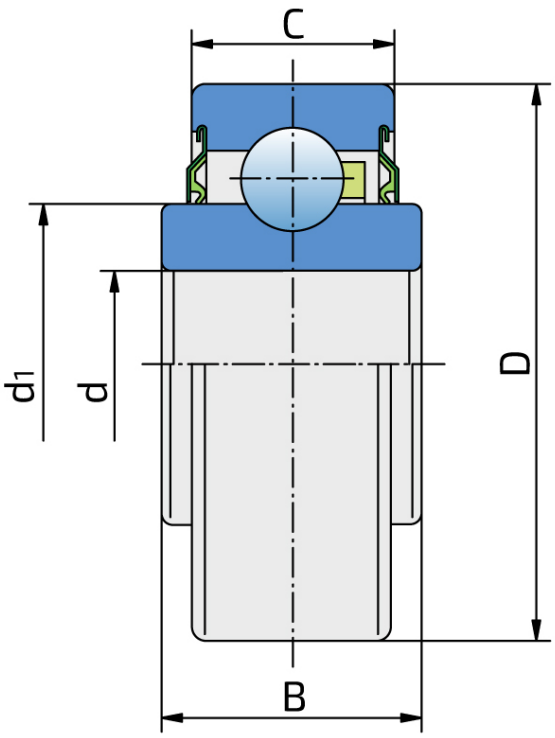



Technical Specification

d	Bore diameter	35	mm
d1	Outer diameter inner ring	46.1	mm
D	Outside diameter	72	mm
C	Width outer ring	17	mm
B	Width inner ring	25	mm
kg	Mass	0.35	kg
Cdyn	Dynamic load rating	25.5	kN
Co	Static load rating	15.3	kN
Pu	Fatigue load limit	0.643	kN

Sealing

S SEAL / S SEAL (2S)

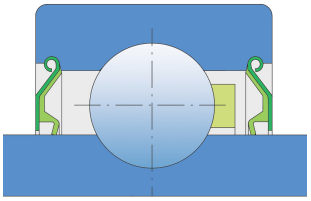

Single lip seal with the labyrinth between the sheet part and the rubber lip which conducts the contact sealing. The friction and speeds are the same as with RS but provides much better protection against the rough impurity particles. This is very good sealing system: the sheet part protects the seal from the soil, dust and rough particles. At the same time makes the labyrinth with the rubber part. The rubber part provides contact sealing which prevents penetration of finer impurities, water, moisture, steam etc. Suitable for neutral conditions because of the presence of the foreign materials. It is used with the Y bearing (standard) and deep groove ball bearings.